Proteus
launch and recovery system

STL RESEARCH

Proteus 200 Launch and Recovery System (LARS)

The Proteus 200 LARS is an innovative, stand-alone, deck-mounted system, that enables the safe launch and recovery of autonomous or semi-autonomous marine equipment; such as ROVs, AUVs, ASVs; under local or remote control.

As the host vessel and target (ROV, AUV etc.) are floating, they are both subject to wave induced motions. The Proteus control system uses computer vision to automatically synchronise movement of the coupling tool with the target to ease attachment and retrieval.

PRINCIPLE: **A stand-alone launch and recovery system that can be installed on any suitable vessel (including autonomous / unmanned surface vessels) and operates without requiring any vessel services or data, except for the optional use of ship-generated electrical power.**

DESCRIPTION: **Building on the experience gained during extensive testing and development of the prototype Proteus 100 system, STL have designed the Proteus 200. The modified and optimised arm allows for a greater payload and improved range of motion, all while reducing the deck space required for installation.**
The system consists of an articulated three-section arm, mounted on a foundation with slew ring and gimbal (see Figure 1 below). The arm carries an interchangeable coupling tool on the last section, which latches onto a free-floating target for automated recovery or launch operations. The slew ring, gimbal and arm sections are moved hydraulically under computer control, actively compensating for relative motions between the target and host vessel.

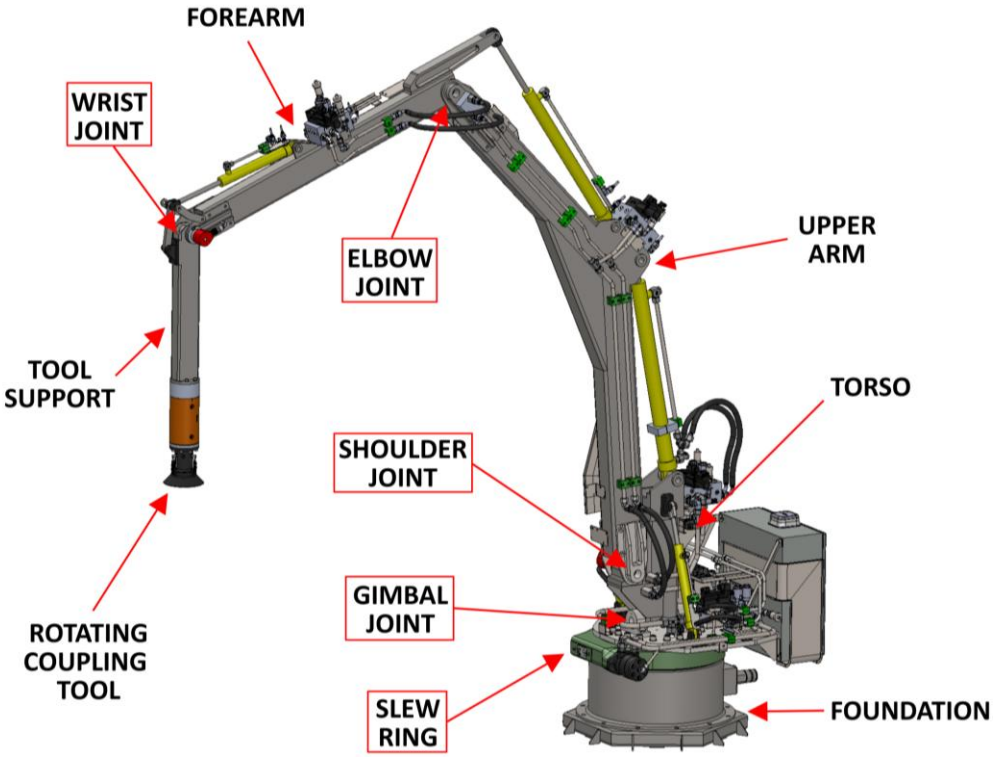

Figure 1: *Overview of the Proteus 200 LAR System*

LAUNCH: Proteus may simply serve as a steerable hoist, latching onto the device on the vessel deck, lifting it clear and over the vessel's side, then lowering it into the water and releasing it to depart on its mission. This process can be controlled by a local or remote operator. Alternatively launch may be carried out autonomously.

RECOVERY: First, the target must manoeuvre into the field of view of Proteus' tracking system. Proteus is then moved into its starting position and the tracking system engaged. This will acquire the target's position, aided by markers on its body. The coupling tool then automatically guides itself towards the target's connection point, continuously tracking and compensating for the target's relative movement in the water. Once the coupling tool is successfully aligned with the target's connection point, capture is initiated and the coupling tool moves down to make a secure connection. When the coupling tool is attached, Proteus lifts the target clear of the water, swings it inboard and lowers it into its storage location on the deck.

MOTION MEASUREMENT: When synchronously stabilised (i.e. when the coupling tool matches the target's motion), the camera based visual tracking system measures the floating target's relative position. The Proteus controller uses this data to derive the joint angles required to synchronise the coupling tool with the target. The controller also uses data from a deck-mounted attitude sensor to keep the arm assembly in the vertical plane.

OPERATING WINDOW: Sea trials (Figure 2) and wave tank testing (Figure 3) have proven Proteus 100 capable of operating at Significant Wave Heights up to 0.45mHs, even on smaller vessels, with improvements to these figures predicted for Proteus 200.

SPECIFICATION*:

Payload Weight	Up to 200kg
Lift Height Capability (from mounting surface)	-2.2m to +1.5m
Maximum Reach (from centre of foundation)	3.5m
Pitch/Roll Range	+/- 16 degrees
Slewing Range	360 degrees continuous
System Weight	675kg
System Foundation	0.77m diameter
Hydraulic Power Requirements	7.5kW @ 200 Bar

*Specification subject to change without prior notification

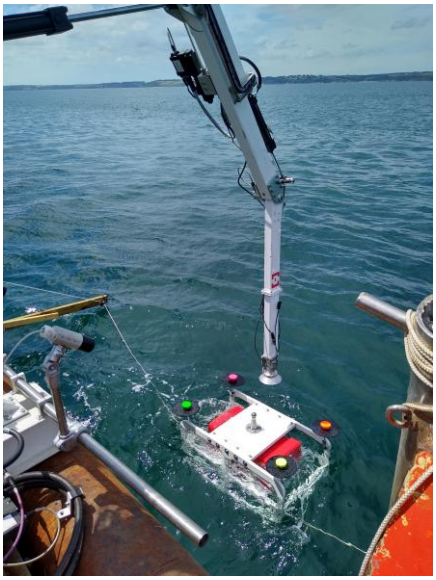

Figure 2: *Sea trials in Falmouth Bay*

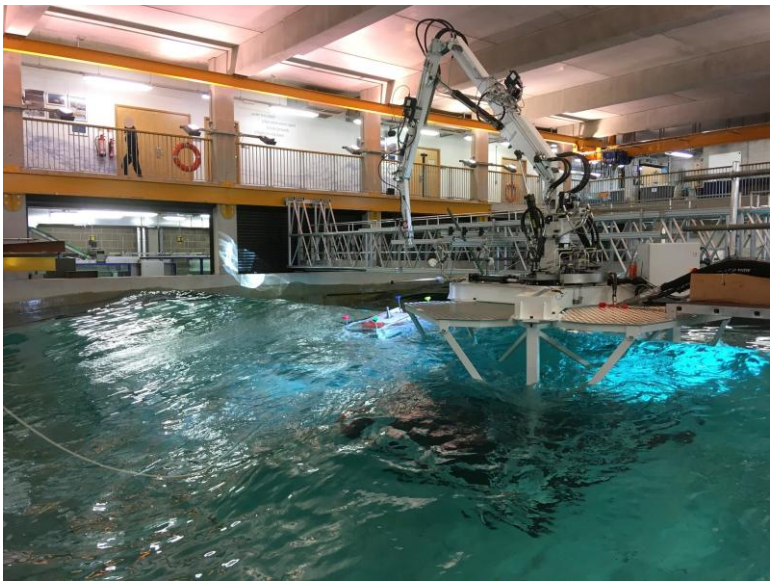

Figure 3*: Plymouth University Wave Tank testing*

PRINCIPAL DIMENSIONS:

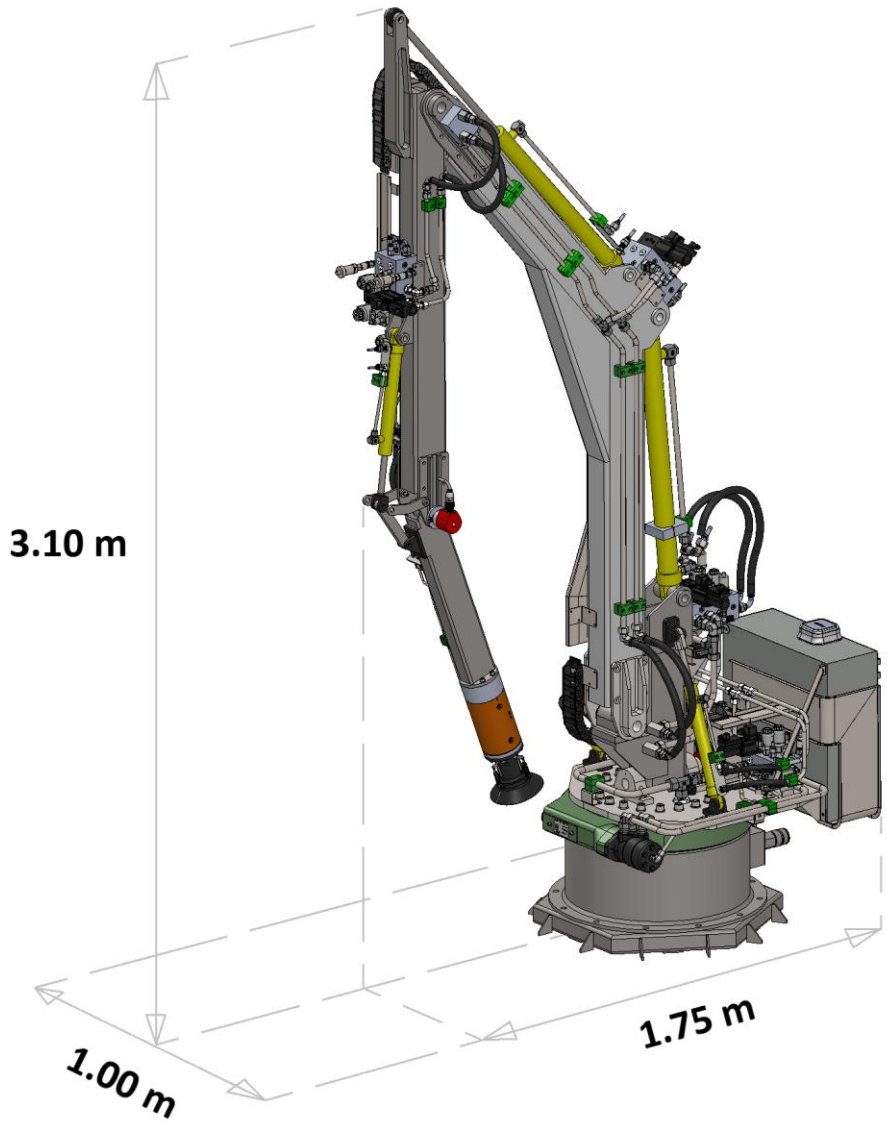

Figure 4: *Principal Dimensions of the System in its Stowed Position*

FEATURES:

- **Simplified LAR process reduces potential hazards to personnel and is less labour intensive**
- **Light-weight design with small footprint, allows Proteus 200 to be installed on smaller, more economical vessels**
- **Enhanced arm geometry gives an improved operating window**
- **Compact, hydraulic slew unit with full 360-degree range of motion**
- **Interchangeable, rotating coupling tool allows easy orientation of a wide variety of autonomous assets during retrieval and stowage**
- **Motion compensated design increases system availability and reduces cost by extending the weather window**
- **Designed for local operation on manned vessels, or fully remote controlled on autonomous surface vessels**

SAFETY:

Design for safety is a key principle and is achieved in the following ways:

- **No dependence upon ship's systems or data beyond vessel station-keeping**
- **Less chance of damage to host vessel or target during launch and recovery procedures**
- **Automatic latching of coupling tool to target reduces the possibility of the equipment being dropped**
- **Optional second camera provides better target acquisition, and redundancy should one camera's view become obscured**

OPERATING ENVELOPE:

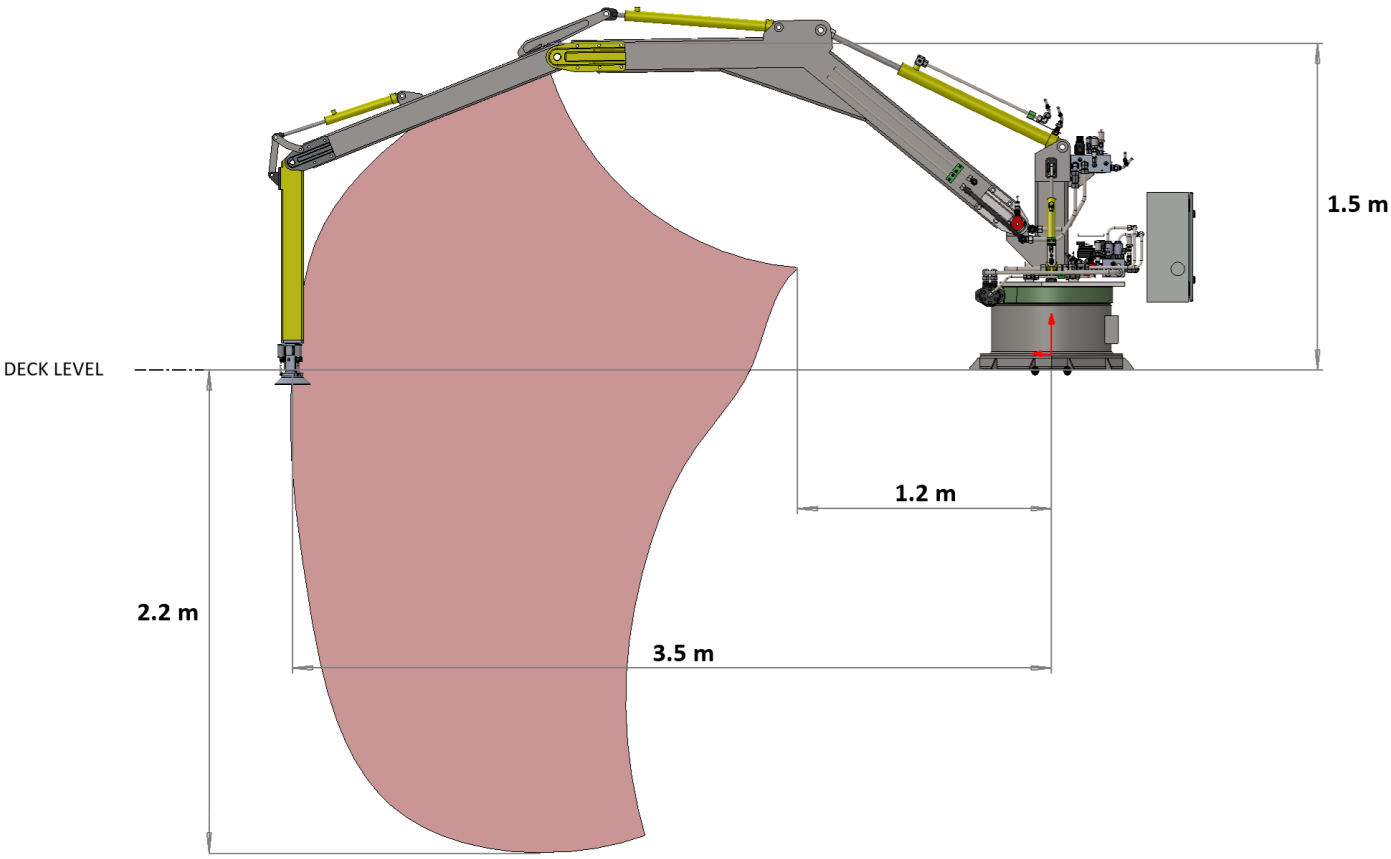

***Figure 5**: Proteus 200 LARS Operating Envelope*

STL Research

7 Mariners Way, Cowes, Isle of Wight, PO31 8PD, UK

Telephone: +44 (0) 1983 201540 E-mail: phil@stlres.co Web: stlres.co

STL Research is a trading name of Submarine Technology Limited - Company Registration No. SC067048